# Three-phase Circuits

江苏谏壁发电厂装机容量162.5万kW，为全国最大的火力发电厂（thermal power plant）

宁夏第一座220千伏新城变电站
**transformer substation**

新安江水力发电厂
**hydroelectric power plant**

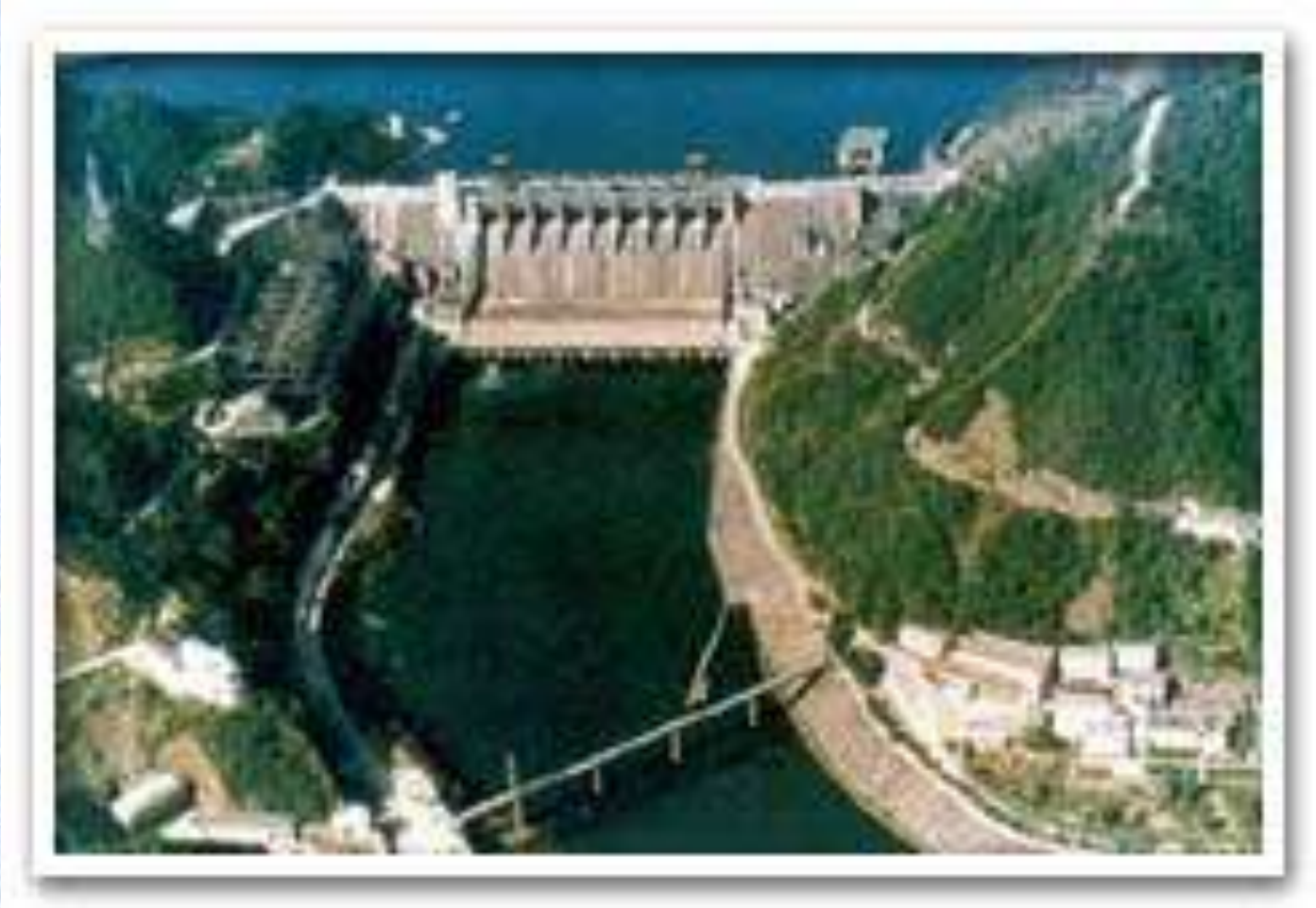

新安江水力发电厂
**hydroelectric power plant**

新安江水电厂水轮机组
**hydraulic turbine set**

# Introduction

## 1. Single phase circuit:

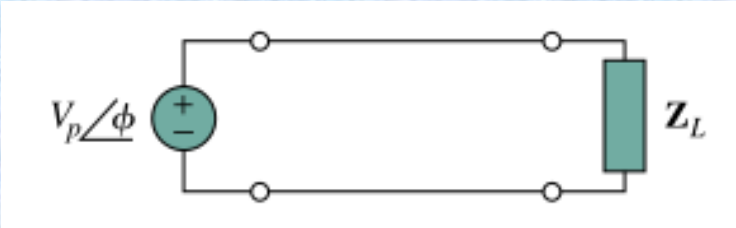


**Two-wire type**

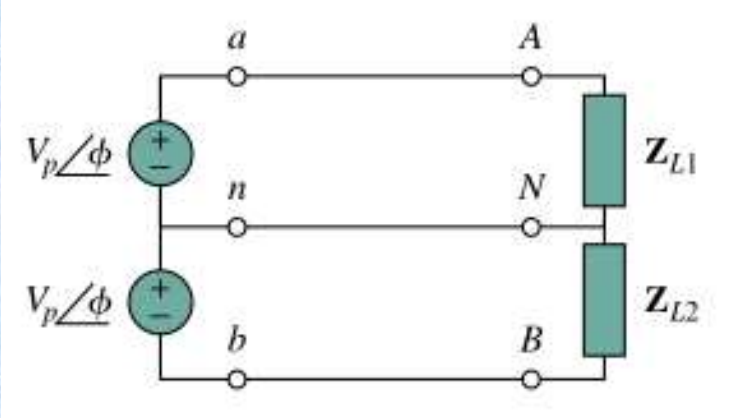


**Three-wire type**

**Polyphase**： Circuits or systems in which the ac sources operate at the same frequency but different phases.

## 2. Two-phase three-wire system：

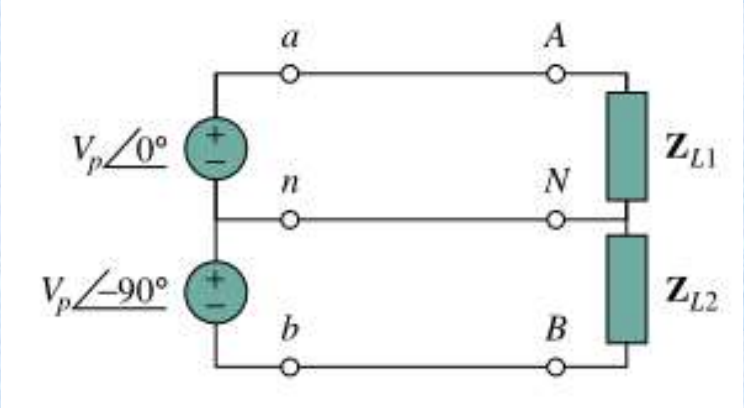


## 3.Three-phase four-wire system:

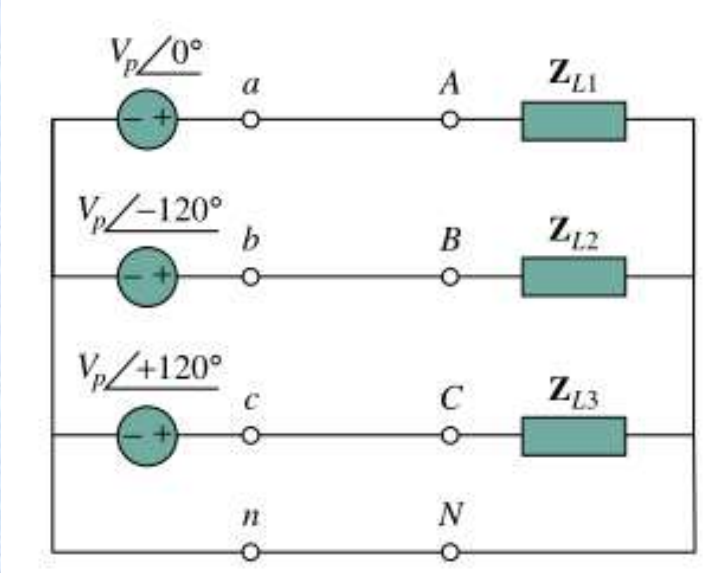

# Balanced three-phase voltages

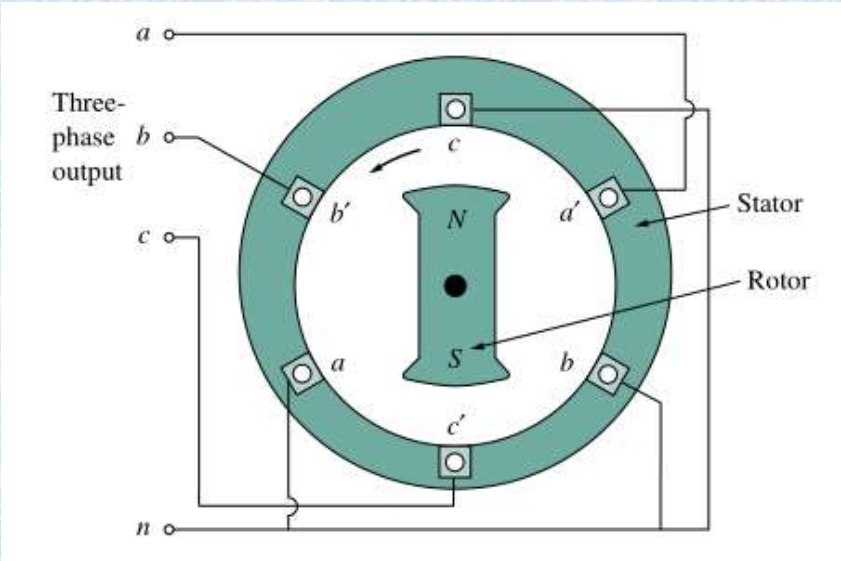


Balanced phase voltages are equal in magnitude and are out of phase with each other by 120°.

$$\dot{V}_{an} = V_p \angle 0^\circ$$

$$\dot{V}_{bn} = V_p \angle -120^\circ$$

$$\dot{V}_{cn} = V_p \angle 120^\circ$$

$$\dot{V}_{an} + \dot{V}_{bn} + \dot{V}_{cn} = 0$$

$$\left|\dot{V}_{an}\right| = \left|\dot{V}_{bn}\right| = \left|\dot{V}_{cn}\right|$$

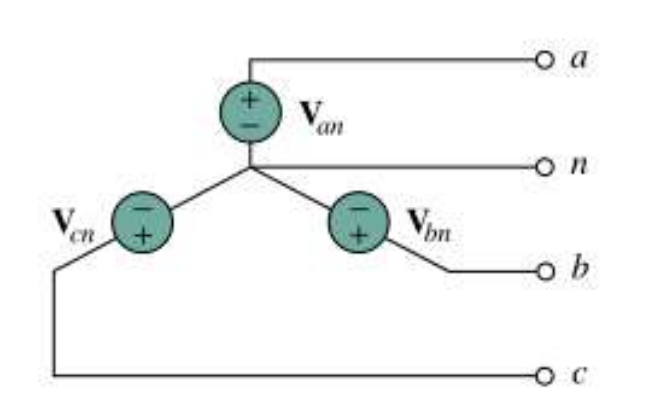


Y-connected source

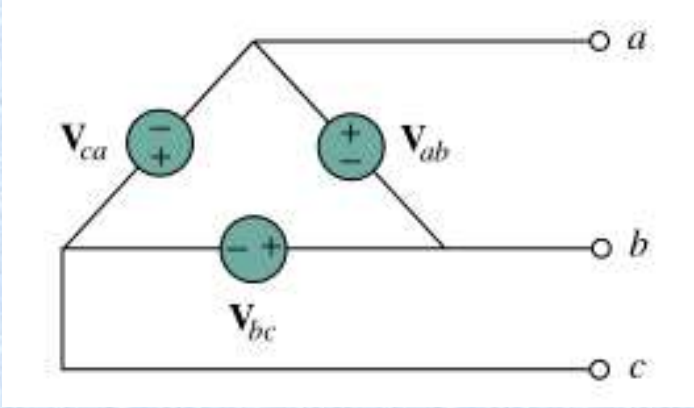


Δ-connected source

**The phase sequence** is the time order in which the voltages pass through their respective maximum values.

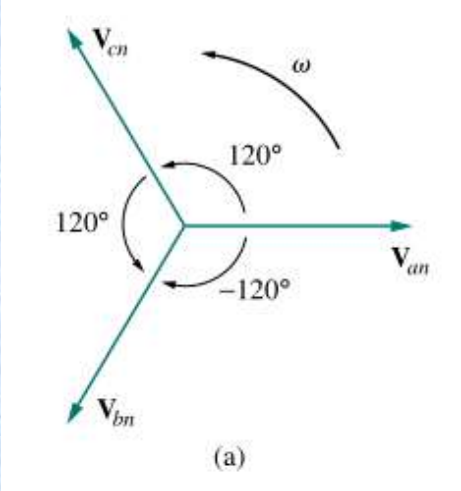


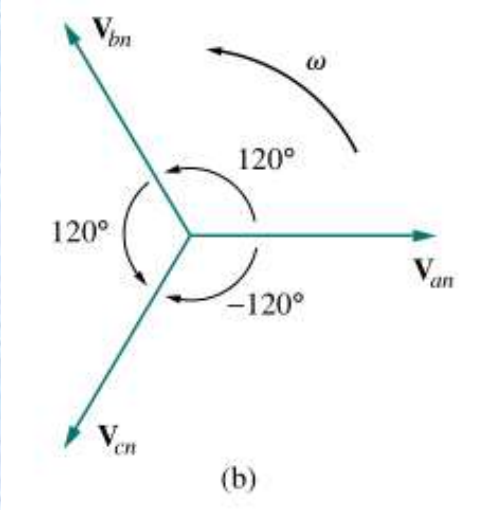


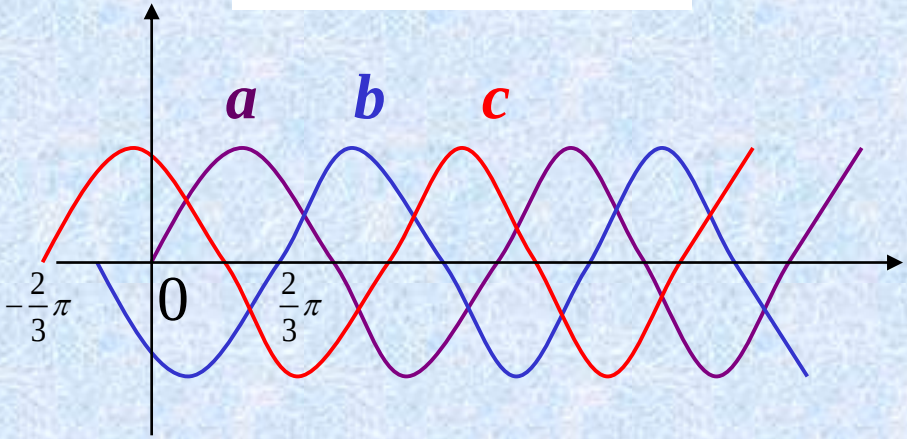


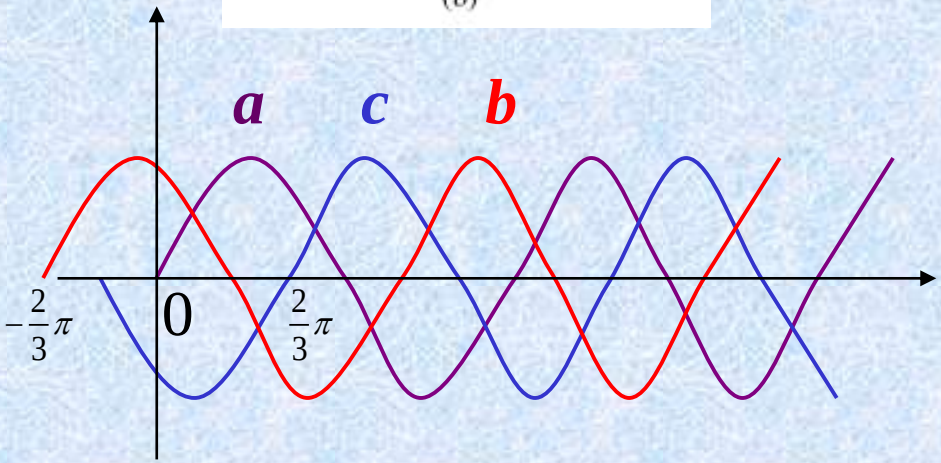


**The phase sequence:**

***a - b - c—positive sequence***

**The phase sequence:**

***a - c - b—negative sequence***

# Balanced three-phase loads

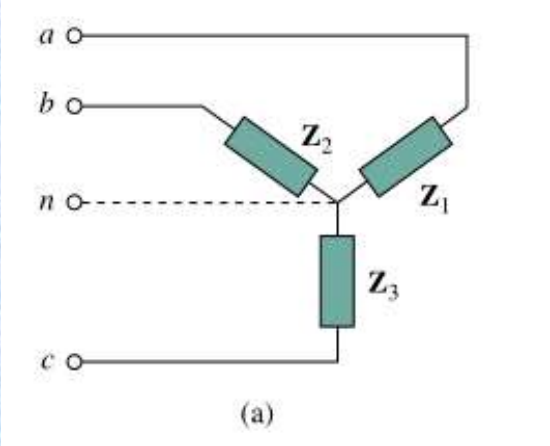


Y-connected load

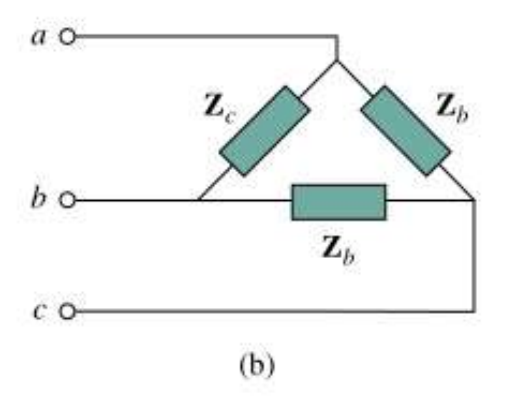


Δ-connected load

**A balanced load** is one in which the phase impedances are equal in magnitude and in phase.

$Z_1 = Z_2 = Z_3 = Z_Y$

$Z_a = Z_b = Z_c = Z_\Delta$

$Z_\Delta = 3Z_Y$

$Z_Y = Z_\Delta/3$

A wye-connected load can be transformed into a delta-connected load, or vice versa

# Source-load connections

- **Balanced Y-Y connection**

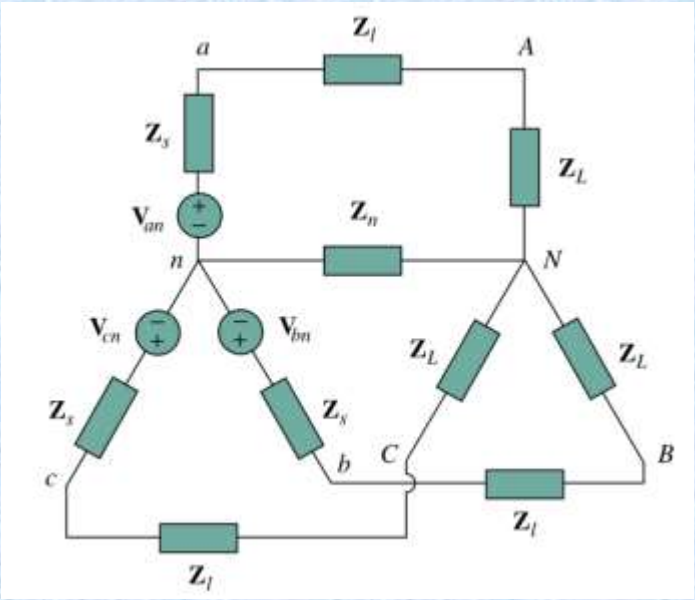


Simplified balanced Y-Y connection

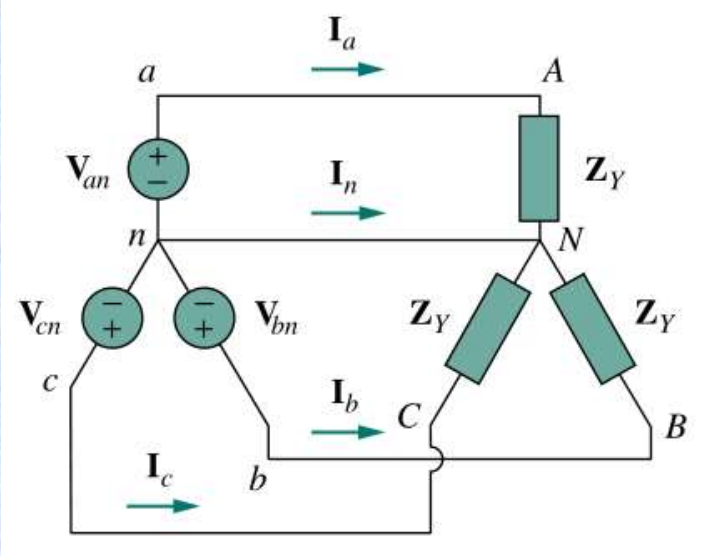


Phase voltages (line-to-neutral):

$$\dot{V}_{an} = V_p \angle 0^\circ \qquad \dot{V}_{bn} = V_p \angle -120^\circ \qquad \dot{V}_{cn} = V_p \angle 120^\circ$$

Line voltages (line-to-line):

$$\dot{V}_{ab} = \dot{V}_{an} + \dot{V}_{nb} = \dot{V}_{an} - \dot{V}_{bn} = V_p \angle 0^\circ - V_p \angle -120^\circ$$

$$= V_p (1 + \frac{1}{2} + \mathrm{j}\frac{\sqrt{3}}{2}) = \sqrt{3} V_p \angle 30^\circ$$

**Line voltages** (line-to-line)

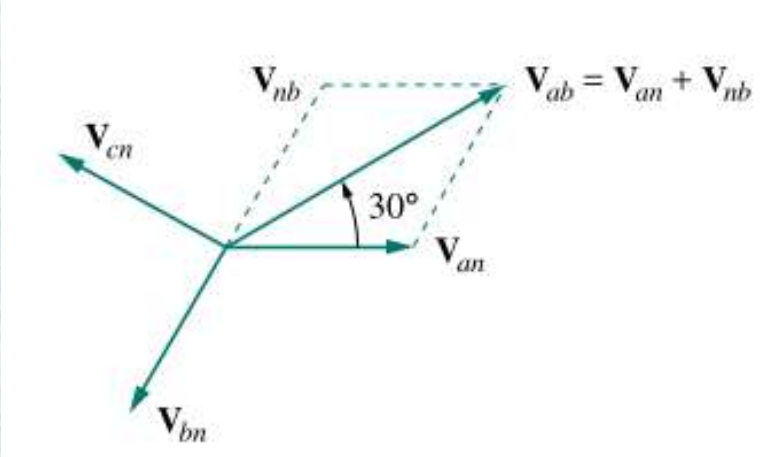


$$\dot{V}_{ab} = \dot{V}_{an} - \dot{V}_{bn} = \sqrt{3}V_p\angle 30°$$

$$\dot{V}_{bc} = \dot{V}_{bn} - \dot{V}_{cn} = \sqrt{3}V_p\angle -90°$$

$$\dot{V}_{ca} = \dot{V}_{cn} - \dot{V}_{an} = \sqrt{3}V_p\angle -210° = \sqrt{3}V_p\angle 150°$$

$$V_L = \sqrt{3}V_p = \sqrt{3}V_{Z_Y}$$

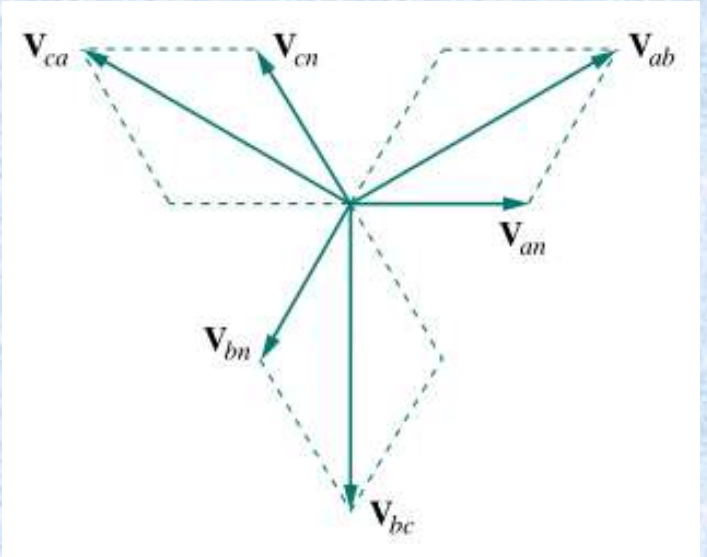


Where $V_p = \left|\dot{V}_{an}\right| = \left|\dot{V}_{bn}\right| = \left|\dot{V}_{cn}\right|$

$$V_L = \left|\dot{V}_{ab}\right| = \left|\dot{V}_{bc}\right| = \left|\dot{V}_{ca}\right|$$

**Conclusion:**

- The magnitude $V_L$ of the line voltage is $\sqrt{3}$ times the magnitude $V_p$ of the phase voltage.
- The line voltages lead their corresponding phase voltages by 30°.

# Line currents and phase currents

$$\dot{I}_a = \frac{\dot{V}_{an}}{Z_Y}$$

$$\dot{I}_b = \frac{\dot{V}_{bn}}{Z_Y} = \frac{\dot{V}_{an}\angle -120^\circ}{Z_Y}$$

$$\dot{I}_c = \frac{\dot{V}_{cn}}{Z_Y} = \frac{\dot{V}_{an}\angle 120^\circ}{Z_Y}$$

$$\dot{I}_a + \dot{I}_b + \dot{I}_c = 0$$

$$\dot{I}_n = -(\dot{I}_a + \dot{I}_b + \dot{I}_c) = 0$$

$$\dot{V}_{nN} = Z_n \dot{I}_n = 0$$

**Conclusion:** $I_L = I_p = I_{Z_Y}$

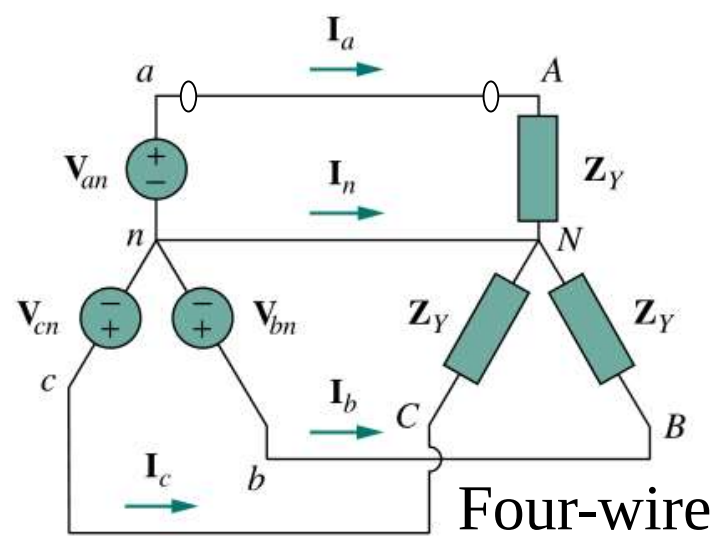

Four-wire

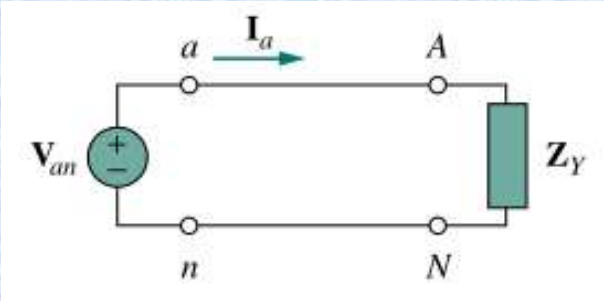


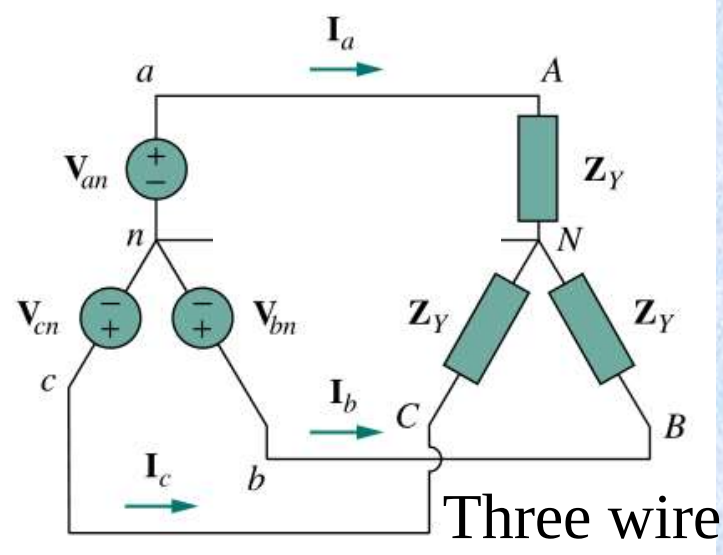

Three wire

## Example

Calculate the line currents in the three-wire Y-Y system.

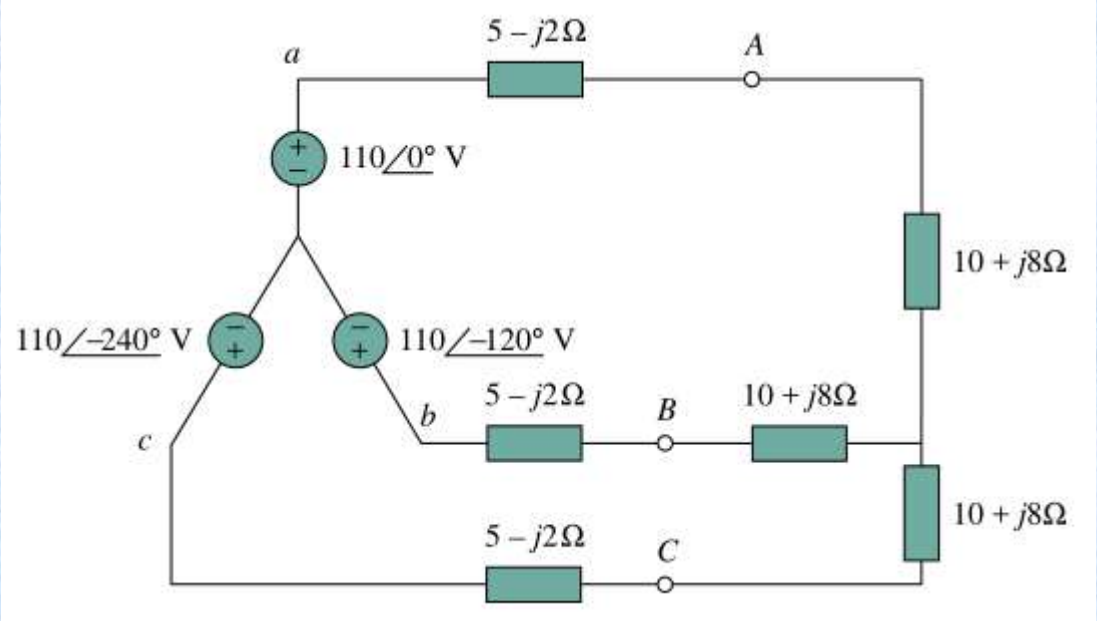


## Solution

$$\dot{I}_a = \frac{\dot{V}_{an}}{Z_Y}$$

$$Z_Y = (5 - \text{j}2) + (10 + \text{j}8) = 15 + \text{j}6\ \Omega$$

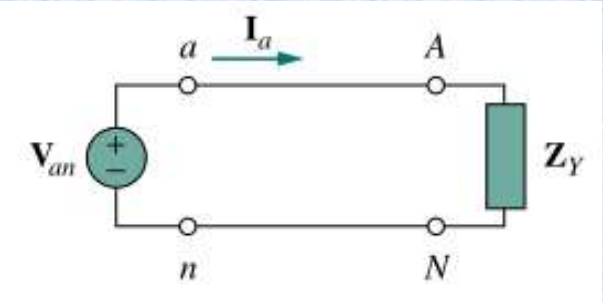


$$\dot{I}_a = \frac{\dot{V}_{an}}{Z_Y} = \frac{110\angle 0^\circ}{15 + \text{j}6} = \frac{110\angle 0^\circ}{16.155\angle 21.8^\circ} = 6.81\angle -21.8^\circ \text{A}$$

$$\dot{I}_b = \frac{\dot{V}_{bn}}{Z_Y} = \frac{\dot{V}_{an}\angle -120^\circ}{Z_Y} = 6.81\angle -141.8^\circ \text{A}$$

$$\dot{I}_c = \frac{\dot{V}_{cn}}{Z_Y} = \frac{\dot{V}_{an}\angle 120^\circ}{Z_Y} = 6.81\angle 98.2^\circ \text{A}$$

- **Balanced Y-Δ connection** (the most practical three-phase system)

For positive sequence,

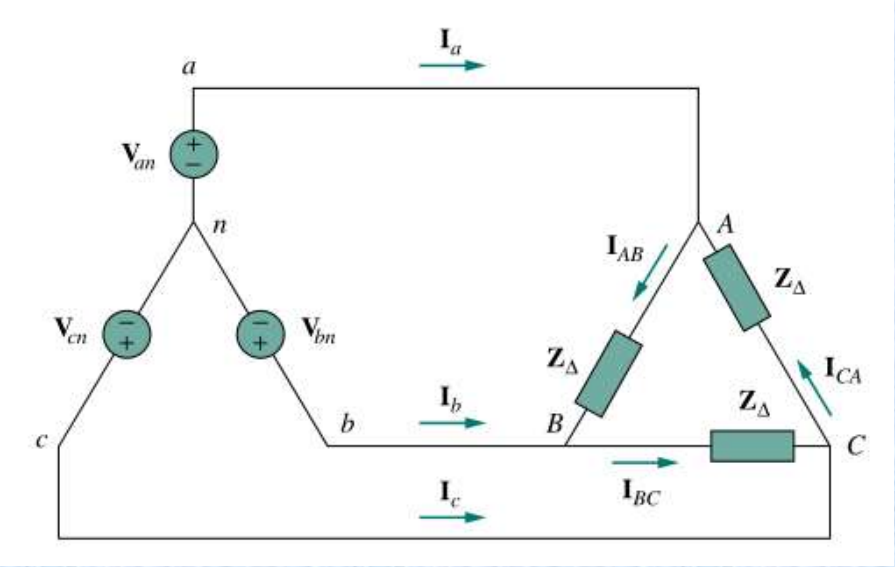


$$\dot{V}_{an} = V_p\angle 0^\circ \qquad \dot{V}_{bn} = V_p\angle -120^\circ$$

$$\dot{V}_{cn} = V_p\angle 120^\circ$$

$$\dot{V}_{ab} = \sqrt{3}V_p\angle 30^\circ = \dot{V}_{AB}$$

$$\dot{V}_{bc} = \sqrt{3}V_p\angle -90^\circ = \dot{V}_{BC}$$

$$\dot{V}_{ca} = \sqrt{3}V_p\angle 150^\circ = \dot{V}_{CA}$$

$$V_L = \sqrt{3}V_p = V_{Z_\Delta}$$

$$\dot{I}_{AB} = \frac{\dot{V}_{AB}}{Z_\Delta}$$

$$\dot{I}_{BC} = \frac{\dot{V}_{BC}}{Z_\Delta} = \dot{I}_{AB}\angle -120^\circ$$

$$\dot{I}_{CA} = \frac{\dot{V}_{CA}}{Z_\Delta} = \dot{I}\angle 120^\circ$$

$$\dot{I}_a = \dot{I}_{AB} - \dot{I}_{CA} = \dot{I}_{AB}(1-\angle 120^\circ)$$

$$= \dot{I}_{AB}(1-\frac{1}{2}-\mathrm{j}\frac{\sqrt{3}}{2}) = \sqrt{3}\dot{I}_{AB}\angle -30^\circ$$

$$\dot{I}_b = \sqrt{3}\dot{I}_{AB}\angle -150^\circ \qquad \dot{I}_c = \sqrt{3}\dot{I}_{AB}\angle 90^\circ$$

Line current $I_L = \left|\dot{I}_a\right| = \left|\dot{I}_b\right| = \left|\dot{I}_c\right|$

Phase current $I_p = \left|\dot{I}_{AB}\right| = \left|\dot{I}_{BC}\right| = \left|\dot{I}_{CA}\right|$

(On load side)

$$I_L = \sqrt{3} I_p$$

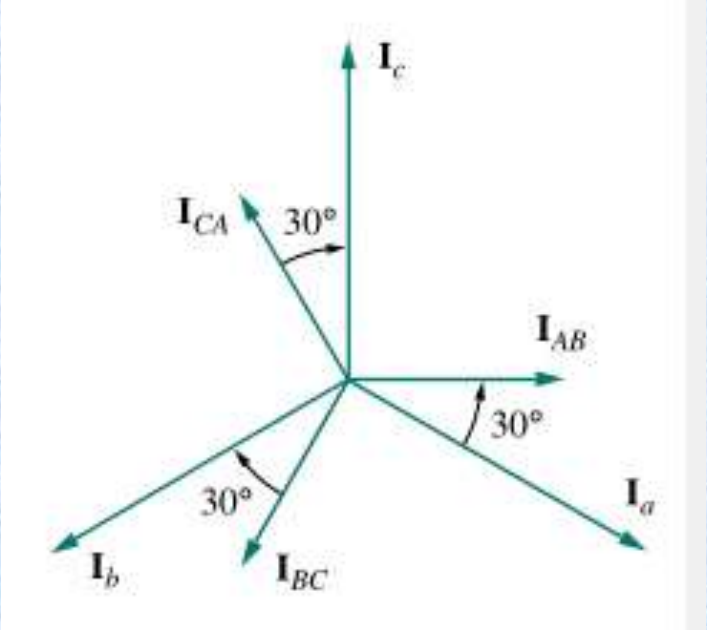


**Conclusion:**

- The magnitude $I_L$ of the line current is $\sqrt{3}$ times the magnitude $I_p$ of the phase current.

- The line currents lag the corresponding phase currents by 30°.

- **Balanced Δ-Δ connection**

For positive sequence,

$$\dot{V}_{an} = V_p \angle 0^\circ \qquad \dot{V}_{bn} = V_p \angle -120^\circ$$

$$\dot{V}_{cn} = V_p \angle 120^\circ$$

$$\dot{V}_{ab} = V_p \angle 0^\circ = \dot{V}_{AB}$$

$$\dot{V}_{bc} = V_p \angle -120^\circ = \dot{V}_{BC}$$

$$\dot{V}_{ca} = V_p \angle 120^\circ = \dot{V}_{CA}$$

$$\dot{I}_{AB} = \frac{\dot{V}_{AB}}{Z_\Delta}$$

$$\dot{I}_{BC} = \frac{\dot{V}_{BC}}{Z_\Delta} = \dot{I}_{AB} \angle -120^\circ$$

$$\dot{I}_{CA} = \frac{\dot{V}_{CA}}{Z_\Delta} = \dot{I} \angle 120^\circ$$

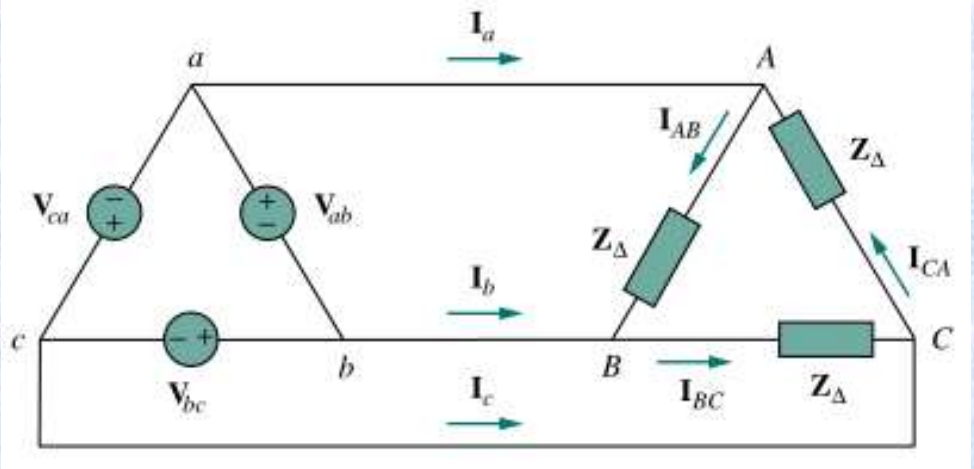


$$V_L = V_p = V_{Z_\Delta}$$

$$I_L = \sqrt{3} I_p = \sqrt{3} I_{Z_\Delta}$$

- **Balanced Δ-Y connection**

For positive sequence,

$$\dot{V}_{an} = V_p \angle 0^\circ \qquad \dot{V}_{bn} = V_p \angle -120^\circ$$

$$\dot{V}_{cn} = V_p \angle 120^\circ$$

$$\dot{V}_{ab} = V_p \angle 0^\circ = \sqrt{3}\dot{V}_{AN}$$

$$\dot{V}_{bc} = V_p \angle -120^\circ = \sqrt{3}\dot{V}_{BN}$$

$$\dot{V}_{ca} = V_p \angle 120^\circ = \sqrt{3}\dot{V}_{CN}$$

$$\dot{I}_{AN} = \frac{\dot{V}_{AN}}{Z_Y}$$

$$\dot{I}_{BN} = \frac{\dot{V}_{BN}}{Z_Y} = \dot{I}_{AN} \angle -120^\circ$$

$$\dot{I}_{CN} = \frac{\dot{V}_{CN}}{Z_Y} = \dot{I}_{AN} \angle 120^\circ$$

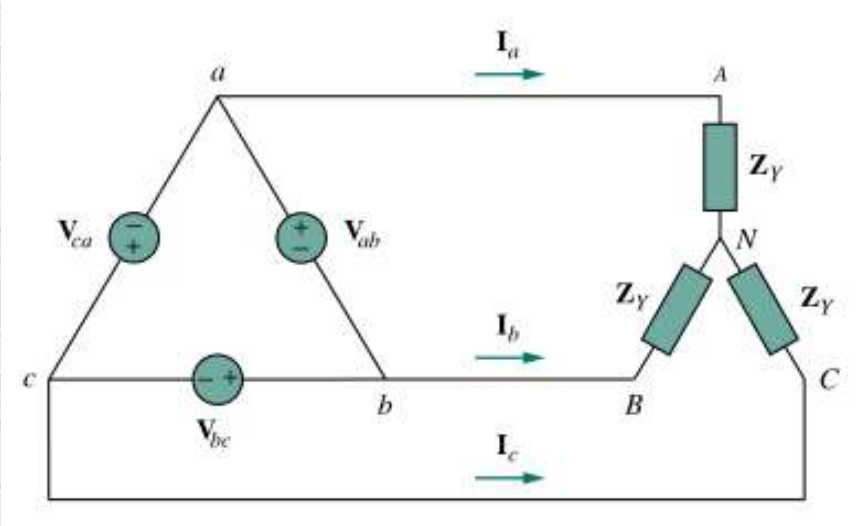


$$V_L = V_p = \sqrt{3}V_{Z_Y}$$

$$I_L = I_{Z_Y}$$

# Power in a Balanced System

**1. Average power:** $P = P_a + P_b + P_c$

$Z_1 = Z_2 = Z_3 = Z$

$$P = 3V_p I_p \cos\varphi_Z$$

**Y load** $I_p = I_L$ , $V_p = V_L / \sqrt{3}$

**Δ load** $I_p = I_L / \sqrt{3}$ , $V_p = V_L$

∴

$$P = \sqrt{3} V_L I_L \cos\varphi_Z$$

**2. Instantaneous power**

$$p(t) = p_a(t) + p_b(t) + p_c(t) = \sqrt{3} V_L I_L \cos\varphi_z = P$$

**Thus the total instantaneous power in a balanced three-phase system is constant.**

**Example** Given Z, $R$=48Ω， $X_L$=64Ω， Vp=220V.

Find $I_p$, $I_L$, and $P$ when $V_p$ is 380V and 220V, respectively.

**Solution （1） $V_L$ =380V， Y-connection**

$$V_p = V_L / \sqrt{3} = 220(\mathrm{V})$$

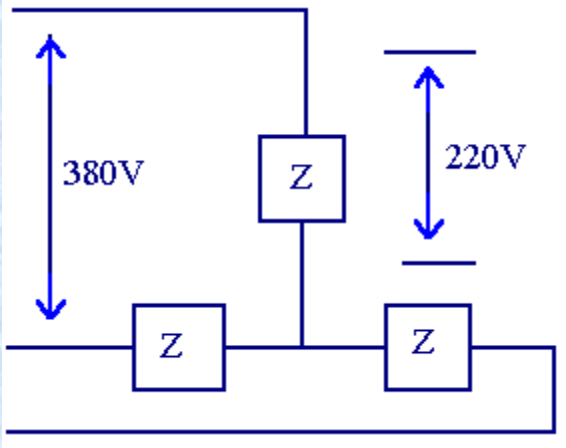


$$I_L = I_p = \frac{V_p}{|Z|} = \frac{V_p}{\sqrt{R^2 + X_L{}^2}} = \frac{220}{80} = 2.75(\mathrm{A})$$

$$P = 3I_p{}^2 R = 108.6(\mathrm{W})$$

**（2） $V_L$ =220V， Δ-connection**

$$V_p = V_L = 220\ (\mathrm{V})$$

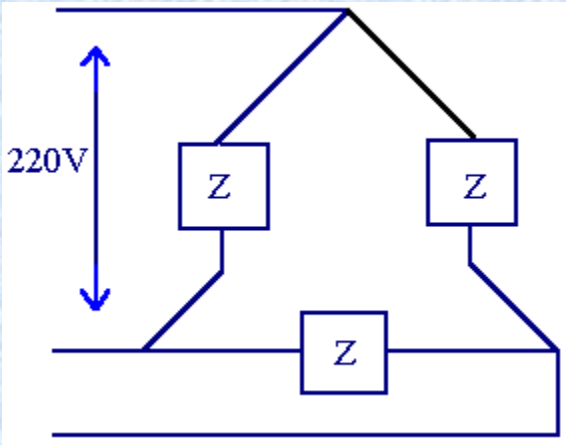


$$I_p = \frac{V_p}{|Z|} = \frac{220}{80} = 2.75(\mathrm{A})$$

$$I_L = \sqrt{3} I_p = 4.77(\mathrm{A})$$

$$P = 108.6(\mathrm{W})$$

# Homework

1. Solve for the line currents in the Y-Δ circuit of Fig.1. Take $Z_\Delta = 60\angle 45\ °\Omega$.

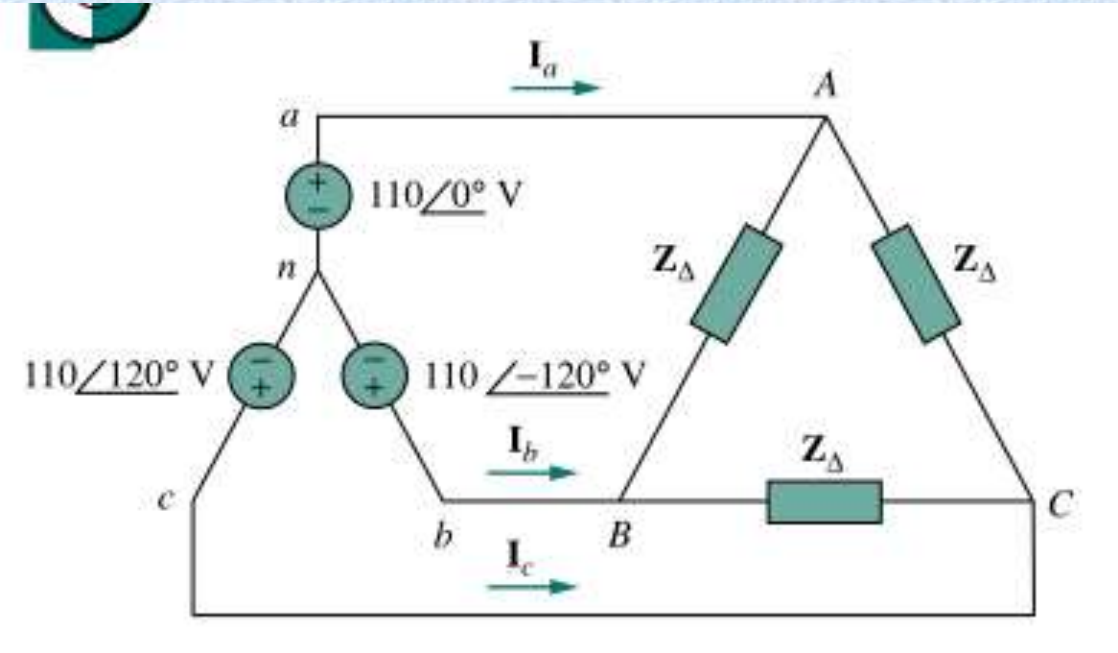


Figure 1

2. Obtain the line currents in the three-phase circuit of Fig.2.

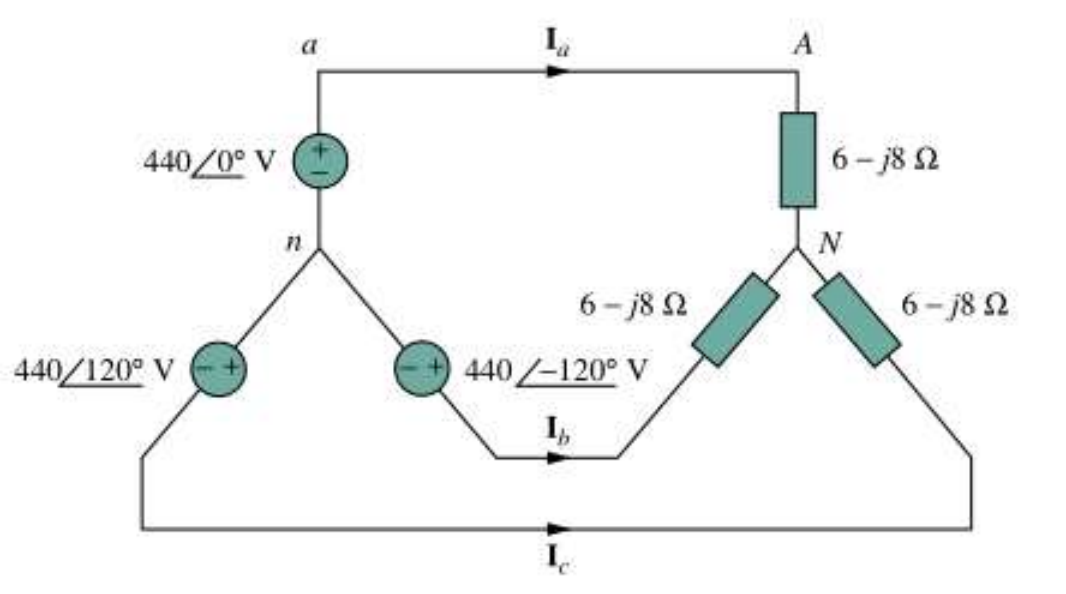


Figure 2

3. For the three-phase circuit in Fig. 3, find the average power absorbed by the delta-connected load with $Z_\Delta = 21 + j24\Omega$.

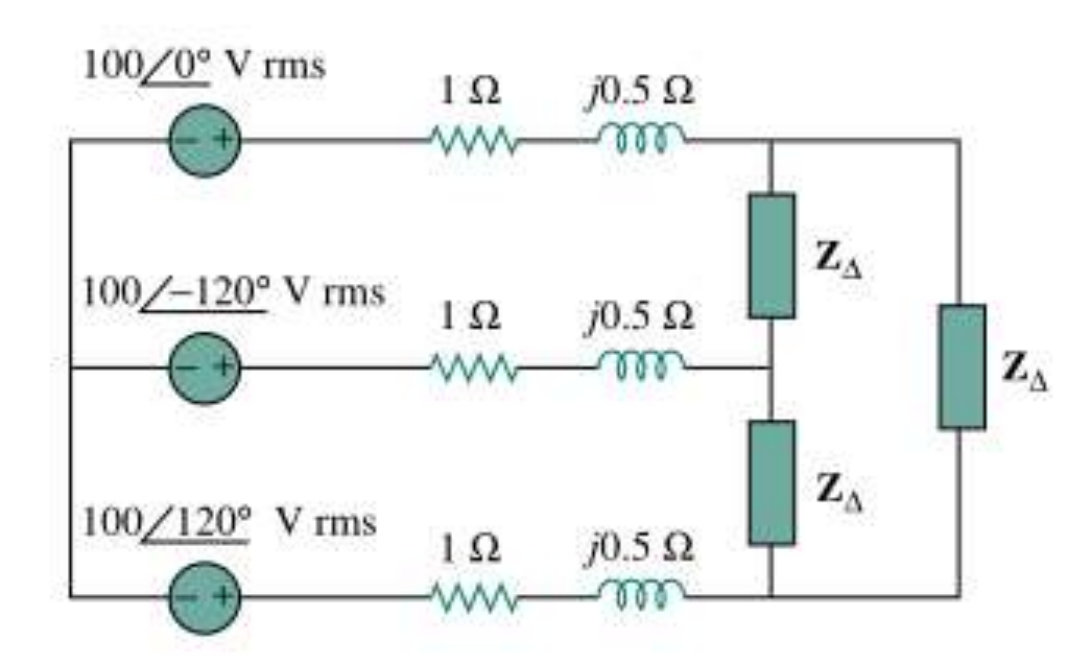


Figure 3